(AE) BO003CG / BP RANDOM ORBIT SANDER

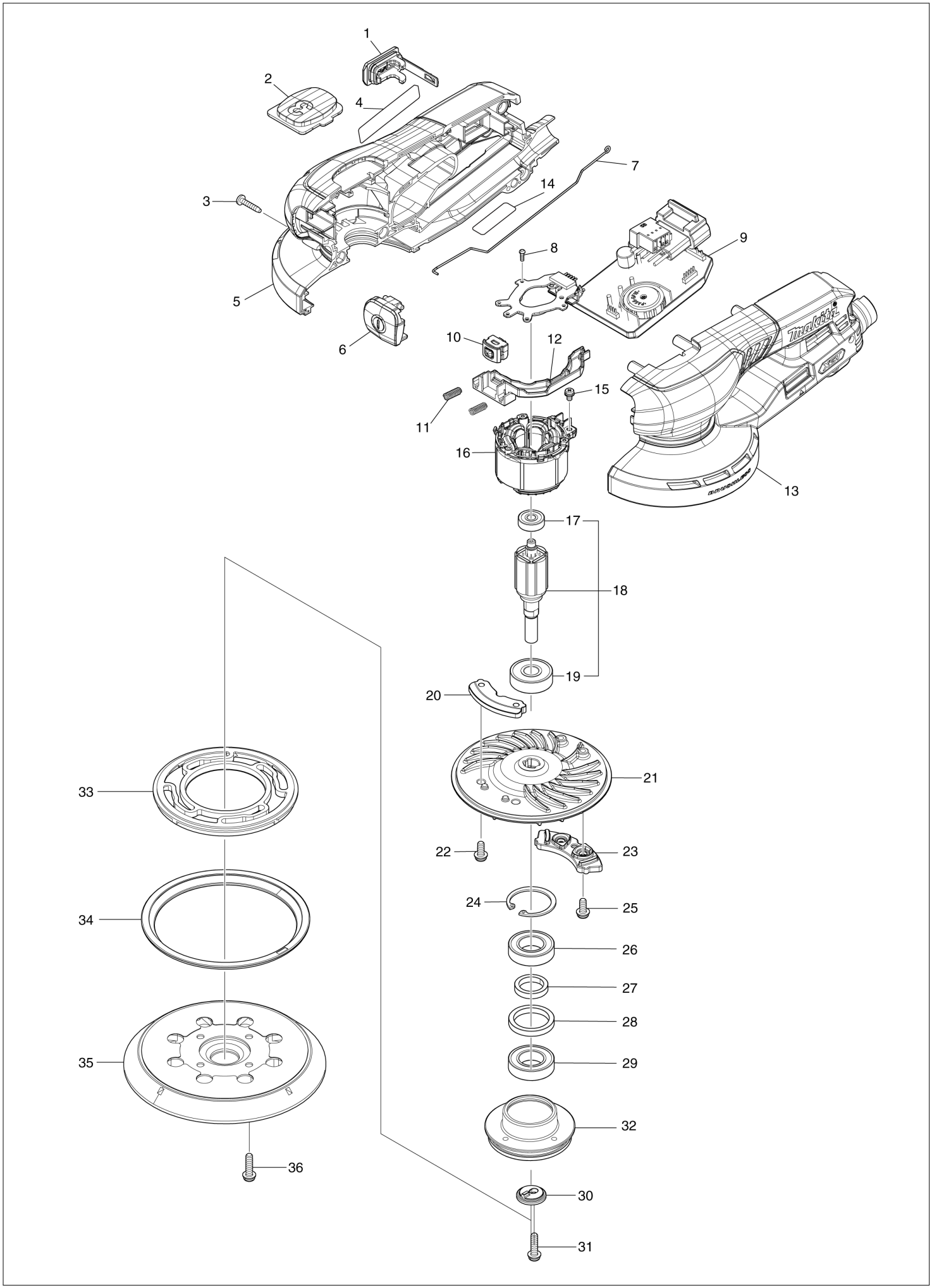

BO003CG / BP RANDOM ORBIT SANDER

Item	Sub	Parts No.	Parts Description	Qty				
001		140F99-0	CAP COMPLETE	1				
	C10	213A05-9	O-RING16	1				
002		413Y38-0	INDICATION PLATE	1				
003		266429-2	TAPPING SCREW 3X16	7				
004		8145U2-5	BO003CG NAME PLATE	1				
005		1830M5-7	HOUSING SET	1				
	C10	252126-6	HEX. LOCK NUT M4-7	2				
	D10		INC. 13					
006		413Y40-3	SWITCH BUTTON	1				
007		327D45-0	EARTH WIRE	1				
008		266490-9	TAPPING SCREW PT 2X6	3				
009		620P00-6	CONTROLLER	1				
010		632L84-8	SWITCH UNIT	1				
011		233436-0	COMPRESSION SPRING 3	2				
012		413Y39-8	SWITCH HOLDER	1				
013		1830M5-7	HOUSING SET	1				
	C10	252126-6	HEX. LOCK NUT M4-7	2				
	D10		INC. 5					
014		8145U3-3	BO003CG SERIAL NO. LABEL	1				
015		652069-6	FLAT HEAD SCREW M3X6	3				
016		629C61-5	STATOR	1				
017		210035-5	BALL BEARING 625DDW	1				
018		519843-4	ROTOR ASS'Y	1				
	D10		INC. 17,19					
019		211092-6	BALL BEARING 629DDW	1				
020		313536-3	UPPER BALANCE WEIGHT	1				
021		240249-2	FAN 98	1				
022		911111-5	PAN HEAD SCREW M4X10 WITH W	2				
023		313537-1	LOWER BALANCE WEIGHT	1				
024		962106-1	RETAINING RING R-28	1				
025		911111-5	PAN HEAD SCREW M4X10 WITH W	2				
026		211244-9	BALL BEARING 6902LLU	1				
027		257868-7	RING 15	1				
028		257A34-2	RING 22	1				
029		211244-9	BALL BEARING 6902LLU	1				
030		313518-5	RETAINER	1				
031		911128-8	P.H.SCREW M4X16 WITH WR	1				
032		312F10-4	BEARING BOX	1				
033		424131-5	BRAKE RING	1				
034		422B47-0	RUBBER GUARD	1				
035		1914J2-2	PAD125 SET	1				
036		911128-8	P.H.SCREW M4X16 WITH WR	4				
A01		122G32-0	DUST BAG ASSY	1				
A02		154553-2	ARM BAND COMPLETE	1				
A02-1		194679-8	ARM BAND COMPLETE SET	1				
A03		413Y47-9	FRONT CUFF 22	1				
A04		D-78667	NET SANDING DISC 125MM A120	1				
A05		D-78704	PAD SAVER DISC 125MM	1				
A06		1914H3-6	BATTERY ADAPTER SET	1				
	D10		COMPO-PARTS					