(AE) DRT52 / CORDLESS TRIMMER

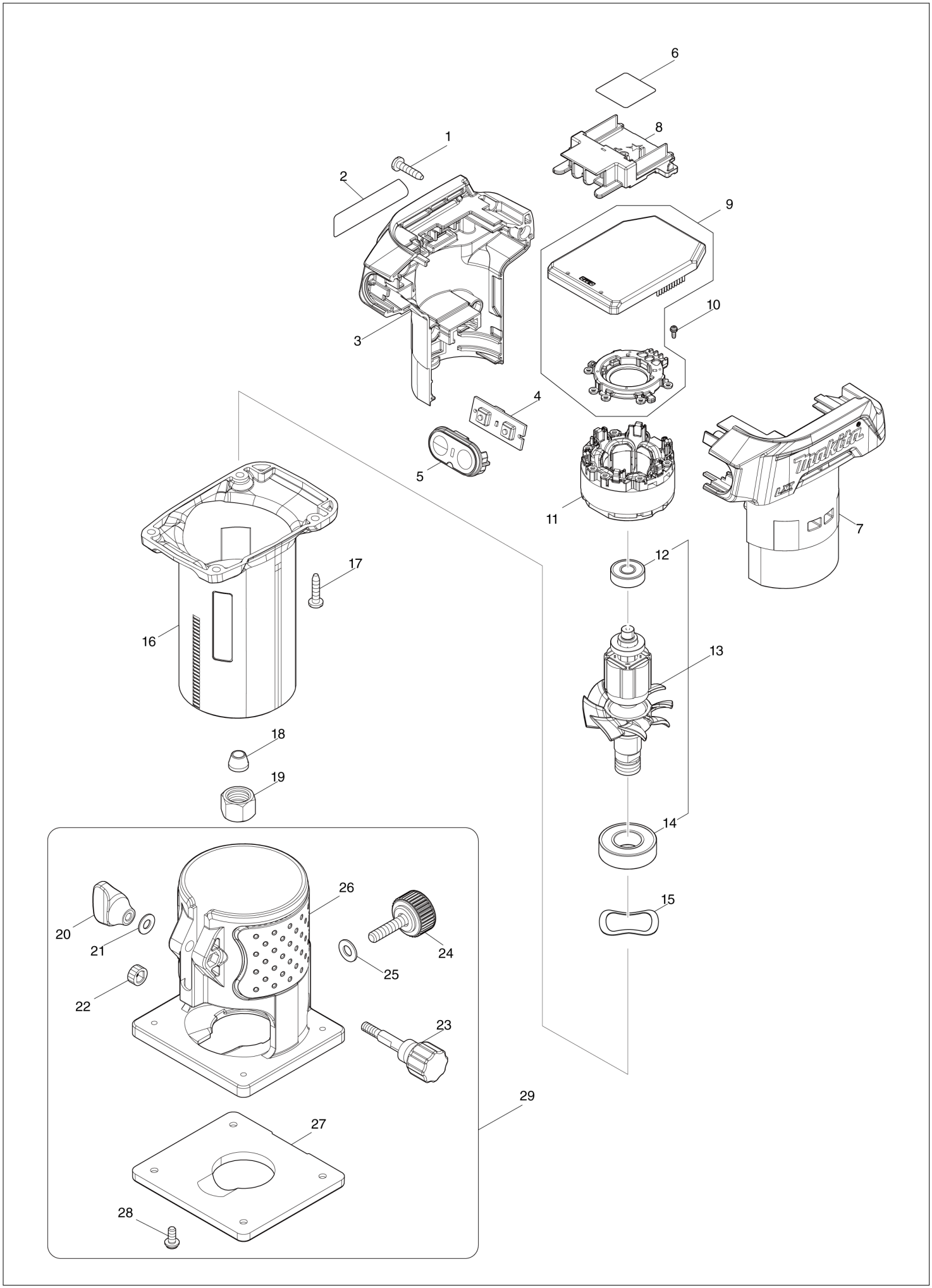

DRT52 / CORDLESS TRIMMER

Item	Sub	Parts No.	Parts Description	Qty	I/C	E/C No.	Close No.	Remark
001		266326-2	TAPPING SCREW 4X18	4				
002		8145G5-1	DRT52 NAME PLATE	1				
003		1830K8-7	HOUSING SET	1				
	C10	263005-3	RUBBER PIN 6	2				
	D10		INC. 7					
004		620P27-6	SWITCH CIRCUIT	1				
005		141V04-6	SWITCH PLATE COMPLETE	1				
006		8145G6-9	DRT52 SERIAL NO. LABEL	1				
007		1830K8-7	HOUSING SET	1				
	C10	263005-3	RUBBER PIN 6	2				
	D10		INC. 3					
008		643874-2	TERMINAL	1				
009		620P26-8	CONTROLLER	1				
010		652119-7	PAN HEAD SCREW M2X6	6				
011		629C71-2	STATOR	1				
012		210017-7	BALL BEARING 607DDW	1				
013		519858-1	ROTOR ASSEMBLY	1				
	D10		INC. 12,14					
014		211236-8	BALL BEARING 6002DDW	1				
015		267785-3	WAVE WASHER 23	1				
016		141V03-8	OUTER HOUSING COMPLETE	1				
017		266326-2	TAPPING SCREW 4X18	4				
018		763662-2	COLLET CONE 6	1				
019		763661-4	COLLET NUT 6	1				
020		252652-5	THUMB NUT M5	1				
021		941101-4	FLAT WASHER 5	1				
022		226217-9	SPUR GEAR 16	1				
023		265771-8	THUMB SCREW M5X33	1				
024		265763-7	THUMB SCREW M6X25	1				
025		941151-9	FLAT WASHER 6	1				
026		419138-4	BASE	1				
027		410585-2	BASE PROTECTOR	1				
028		265142-9	+ PAN HEAD SCREW M4X10	4				
029		194267-1	TRIMMER BASE ASSEMBLY SET	1				
	D10		INC. 20-28					
A01		122703-7	TRIMMER GUIDE ASS'Y	1				
	C10	251471-6	- FLAT HEAD SCREW M5	1				
	C20	265135-6	+ COUNTERSUNK HEAD SCREW M4X1	1				
	C30	265763-7	THUMB SCREW M6X25	1				
	C40	265764-5	THUMB SCREW M6	1				
	C50	317788-8	GUIDE HOLDER	1				
	C60	324378-0	ROLLER 11	1				
	C70	341136-9	HOOK	1				
	C80	941151-9	FLAT WASHER 6	1				
A02		122704-5	STRAIGHT GUIDE ASS'Y	1				
	C10	252649-4	THUMB NUT M6	1				
	C20	266339-3	CAP SQUARE NECK BOLT M6X20	1				
	C30	343593-7	GUIDE PLATE	1				
A03		191Y83-2	STRAIGHT BIT 6 SET	1				
A04		343577-5	TEMPLET GUIDE 10	1				
A05		781036-5	WRENCH 10	1				
A06		781037-3	WRENCH 17	1				
A07		418647-0	CHIP DEFLECTOR	1				
A08Y		821798-4	PLASTIC CASE	1				
	C10	162315-4	LATCH	2				
A09Y		***DC18SD	DC18SD BATTERY CHARGER	1				
	D10		COMPO-PARTS					
A10Y		197600-6	BATTERY BL1830B SET	1				

Y:DRT52SF(H)
Z:DRT52Z(N)

Interchange
O : Yes
X : No
< : the new part can be substituted for the current.
> : the current part can be substituted for the new.
S : Interchangeable as a set.